PRODUCT IDENTIFICATION

AII0201C0G151J500NF

0201 | C0G (NP0) | 150pF | ±5% | 50VDC



Illustrative product rendering · Not to scale

Product Overview

Compact two-terminal C0G (NP0) SMD MLCC for low-drift signal-path capacitance in space-constrained circuits.

Series Classification

The I-series denotes an industrial product family; it does not establish automotive or product-specific reliability qualification.

TYPICAL APPLICATIONS

- Low-loss signal coupling and filtering
- Precision timing and oscillator networks
- Impedance matching in compact circuits
- Frequency-sensitive PCB assemblies

ENGINEERING CONSIDERATIONS

- Check the required capacitance tolerance and operating-temperature range.
- Verify Q and insulation resistance against applicable series test limits.

KEY SPECIFICATIONS

Case size	0201 (0603 Metric)
Dielectric	C0G (NP0)
Capacitance	150 pF
Tolerance	±5%
Rated voltage	50 VDC
Operating temp.	−55°C to +125°C
Temp. characteristic	0 ±30ppm/°C
Quality factor (Q)	≥1,000*
Insulation resistance	≥10 GΩ*
Nominal thickness	0.30 ±0.09 mm
Maximum thickness	0.39 mm
Termination	Standard (N)
RoHS / REACH	Compliant

* Q and I.R. are series-level reference limits, not product-specific test results. Confirm applicability before design approval.

© 2026 MLCCAI, Inc. | mlccs.com | support@mlccai.com

MLCCAI PART NUMBER STRUCTURE

AI	I	0201	C0G	151	J	500	N	F
Prefix	Series	Case Size	Dielectric	Capacitance	Tolerance	Rated Voltage	Termination	Thickness

PART NUMBER DECODING

Code	Field	Decoded Value / Technical Meaning
AI	Prefix	MLCCAI own-brand prefix
I	Series	Industrial High-Reliability (family name)
0201	Case Size	0201 (0603 Metric); 0.60 × 0.30 mm
C0G	Dielectric	C0G (NP0); −55°C to +125°C; 0 ±30ppm/°C
151	Capacitance	150 pF (0.15 nF)
J	Tolerance	±5%
500	Rated Voltage	50 VDC
N	Termination	Standard termination
F	Thickness	0.30 ±0.09 mm; maximum 0.39 mm

ENGINEERING NOTES

Technical Interpretation

- C0G (NP0) temp. coefficient: 0 ±30ppm/°C. Q is a series-level reference and depends on capacitance and test frequency.

Soldering / Assembly Guidance

- The part number does not specify a reflow profile. Check current manufacturer recommendations and validate the intended SMT assembly process.

© 2026 MLCCAI, Inc. | mlccs.com | support@mlccai.com

MECHANICAL OUTLINE

Unit: mm

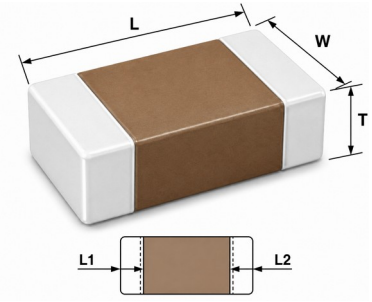

Length (L)	0.60 ±0.09
Width (W)	0.30 ±0.09
Thickness (T)	0.30 ±0.09
Term. (L1/L2)	0.15 +0.10/−0.05
Maximum thickness	0.39

INTERNAL STRUCTURE

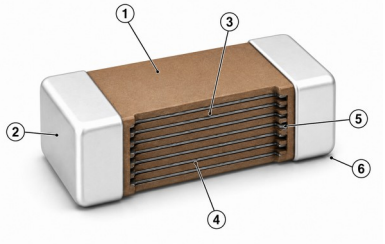

Ref.	Structural Element
①	Ceramic body
②	External end termination
③	Internal electrode
④	Ceramic dielectric layer
⑤	Electrode / termination interface
⑥	Solderable outer finish

PACKAGING DIMENSIONS

Unit: mm

Paper Tape — 0201

A0	0.40 ±0.10
B0	0.70 ±0.10
T	≤0.55
W	8.00 ±0.30
P0	4.00 ±0.10
P1	2.00 ±0.05
D0	1.50 +0.10/−0
E	1.75 ±0.10
F	3.50 ±0.05

7-inch Reel

C	13.0 +0.5/−0.2
W1	8.4 +1.5/−0
A	Approx. 178.0
N	60.0 +1.0/−0

TAPE & REEL REFERENCE DRAWINGS

0201 Paper Tape

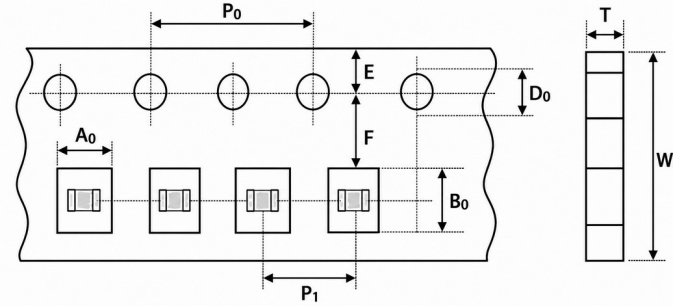

7-inch Reel

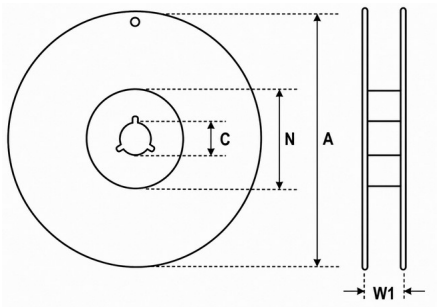

Packaging: 7-inch paper-tape reel, 15,000 pcs/reel; confirm supplier drawing and SPQ.

Illustrations are not to scale; internal layer count may vary.

© 2026 MLCCAI, Inc. | mlccs.com | support@mlccai.com

ELECTRICAL REFERENCE LIMITS

Nominal capacitance	150 pF
Capacitance tolerance	±5%
C0G (NP0) range	−55°C to +125°C
Temp. characteristic	0 ±30ppm/°C (Class I)
Quality factor (Q)	≥1,000 (C0G (NP0), 150 pF)
Insulation resistance (I.R.)	≥10 GΩ (Class I reference)
Dielectric withstand	2.5 × rated DC voltage

MEASUREMENT CONDITIONS

Cap. / Q frequency	1 MHz ±10%
AC test voltage	1.0 ±0.2 Vrms (C0G (NP0), 150 pF)
Conditioning	Class I: no de-aging required
I.R. measurement	Apply rated DC voltage for ≤120 s
Dielectric withstand	2.5 × rated VDC, 1–5 s; current <50 mA
Withstand criterion	No damage or flashover
Temp. measurement	No load; 25°C ref.; −55°C to +125°C

ADDITIONAL SERIES TEST METHODS

Test	Reference test condition	Series acceptance criterion
Solderability	235 ±5°C, 2 ±0.5 s	≥95% terminal metal coverage
PCB bending	1 mm deflection; hold 5 ±1 s	C0G (NP0): ΔC within ±5% or 0.5 pF, whichever is larger

ENGINEERING REFERENCE NOTICE

Series-level test methods are provided for reference and do not establish product-specific testing or qualification.