PRODUCT IDENTIFICATION

AII0201X5R104K100NF

0201 | X5R | 100nF | ±10% | 10VDC



Illustrative product rendering · Not to scale

Product Overview

Compact two-terminal X5R SMD MLCC for low-voltage decoupling and bypass in space-constrained PCB layouts.

Series Classification

The I-series denotes an industrial product family; it does not establish automotive or product-specific reliability qualification.

TYPICAL APPLICATIONS

- Local IC power-rail decoupling
- Low-voltage power-supply bypass
- General-purpose signal filtering
- Compact consumer and embedded designs

ENGINEERING CONSIDERATIONS

- Evaluate effective capacitance under DC bias, temperature, and AC signal conditions.
- Maintain suitable voltage, thermal, and mechanical margins, including PCB mounting stress.

KEY SPECIFICATIONS

Case size	0201 (0603 Metric)
Dielectric	X5R
Capacitance	100 nF / 0.10 uF
Tolerance	±10%
Rated voltage	10 VDC
Operating temp.	−55°C to +85°C
Temp. characteristic	±15% (X5R)
Dissipation factor	≤15%*
Insulation resistance	R × C ≥100 Ω·F*
Nominal thickness	0.30 ±0.09 mm
Maximum thickness	0.39 mm
Termination	Standard (N)
RoHS / REACH	Compliant

* D.F. and I.R. are series-level reference limits, not product-specific test results. Confirm applicability before design approval.

© 2026 MLCCAI, Inc. | mlccs.com | support@mlccai.com

MLCCAI PART NUMBER STRUCTURE

AI	I	0201	X5R	104	K	100	N	F
Prefix	Series	Case Size	Dielectric	Capacitance	Tolerance	Rated Voltage	Termination	Thickness

PART NUMBER DECODING

Code	Field	Decoded Value / Technical Meaning
AI	Prefix	MLCCAI own-brand prefix
I	Series	Industrial High-Reliability (family name)
0201	Case Size	0201 (0603 Metric); 0.60 × 0.30 mm
X5R	Dielectric	−55°C to +85°C; ±15% temperature characteristic
104	Capacitance	100 nF / 0.10 uF (100,000 pF)
K	Tolerance	±10%
100	Rated Voltage	10 VDC
N	Termination	Standard termination
F	Thickness	0.30 ±0.09 mm; maximum 0.39 mm

ENGINEERING NOTES

Technical Interpretation

- X5R ±15% describes temperature-related capacitance variation, not DC-bias retention, aging rate, or part-specific measured performance.

Soldering / Assembly Guidance

- The part number does not specify a reflow profile. Check current manufacturer recommendations and validate the intended SMT assembly process.

© 2026 MLCCAI, Inc.

MECHANICAL OUTLINE

Unit: mm

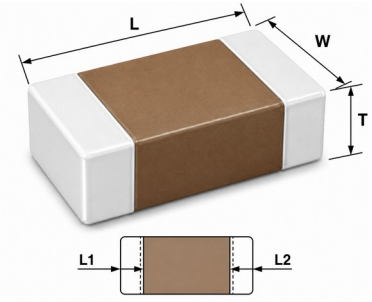

Length (L)	0.60 ±0.09
Width (W)	0.30 ±0.09
Thickness (T)	0.30 ±0.09
Term. (L1/L2)	0.15 +0.10/−0.05
Maximum thickness	0.39

INTERNAL STRUCTURE

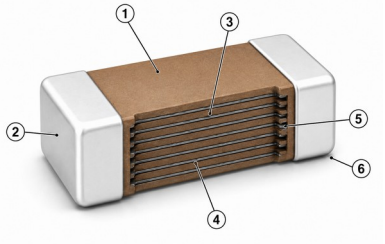

Ref.	Structural Element
①	Ceramic body
②	External end termination
③	Internal electrode
④	Ceramic dielectric layer
⑤	Electrode / termination interface
⑥	Solderable outer finish

PACKAGING DIMENSIONS

Unit: mm

Paper Tape — 0201

A0	0.40 ±0.10
B0	0.70 ±0.10
T	≤0.55
W	8.00 ±0.30
P0	4.00 ±0.10
P1	2.00 ±0.05
D0	1.50 +0.10/−0
E	1.75 ±0.10
F	3.50 ±0.05

7-inch Reel

C	13.0 +0.5/−0.2
W1	8.4 +1.5/−0
A	Approx. 178.0
N	60.0 +1.0/−0

TAPE & REEL REFERENCE DRAWINGS

0201 Paper Tape

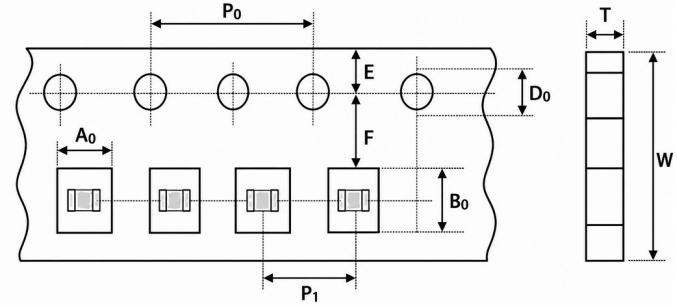

7-inch Reel

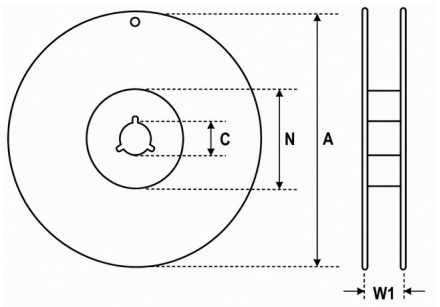

Packaging: 7-inch paper-tape reel, 15,000 pcs/reel; confirm supplier drawing and SPQ.

Illustrations are not to scale; internal layer count may vary.

© 2026 MLCCAI, Inc. | mlccs.com | support@mlccai.com

ELECTRICAL REFERENCE LIMITS

Nominal capacitance	100 nF / 0.10 uF
Capacitance tolerance	±10%
X5R operating range	−55°C to +85°C
Temp. characteristic	±15% (unbiased reference)
Dissipation factor (D.F.)	≤15% (0201 X5R, 10 V)
Insulation resistance (I.R.)	R × C ≥100 Ω·F
Dielectric withstand	2.5 × rated DC voltage

MEASUREMENT CONDITIONS

Cap. / D.F. frequency	1 kHz ±10%
AC test voltage	1.0 ±0.2 Vrms (0201 X5R, 100 nF)
Preconditioning	150 ±10°C for 1 h; 24 ±2 h at ambient
I.R. measurement	Apply rated DC voltage for ≤120 s
Dielectric withstand	2.5 × rated VDC, 1–5 s; current <50 mA
Withstand criterion	No damage or flashover
Temp. measurement	No load; 25°C ref.; −55°C to +85°C

ADDITIONAL SERIES TEST METHODS

Test	Reference test condition	Series acceptance criterion
Solderability	235 ±5°C, 2 ±0.5 s	≥95% terminal metal coverage
PCB bending	1 mm deflection; hold 5 ±1 s	X5R ΔC within ±12.5%

ENGINEERING REFERENCE NOTICE

Series-level test methods are provided for reference and do not establish product-specific testing or qualification.

© 2026 MLCCAI, Inc. | mlccs.com | support@mlccai.com