DATASHEET

FILM CAPACITORS – Dry-type Absorption Capacitor

PART NO.: YHH5014004K101HW

YUHUA ELECTRICAL

YHH Series, 500VAC, 4µF, ±10 %, -40℃~85℃ , Radial, D63*H50mm, NUT

Date: 9/18/2026

Version: 2.0

AUTHORIZED DISTRIBUTOR

NextGen Components, Inc.

USA Office and Warehouse Location: 9 Orchard Road, Suit 106, Lake Forest, CA 92630, USA

RFQ/Order Support: sales@NextGenComponent.com

Note: This page was created by NextGen Components, Inc. (“NextGen”). The attached last document was created by the part manufacturer, not NextGen, and is provided strictly 'as is.’ NextGen, its subsidiaries, affiliates, employees, and agents make no representations or warranties regarding the attached last document and disclaim any liability for the consequences of relying on the information therein. All referenced brands, product names, service names, and trademarks are the property of their respective owners.

■ PART NUMBER GUIDE

The 14 digits part number is formed as follow:

Y	H	H	5	0	1	4	0	0	4	K	1	0	1	H	W

- Series Code: YHH type
- Rated Voltage: 50×10^1=500 Vdc
- Rated Capacitance: 400×10^4 pF = 4 μF
- Capacitance Tolerance:
  - J: ±5 % or 0 %～+5 %
  - K: ±10 % or -5 %～+10 %
- Internal Distinguishing Code: 01 to 99 for different design
- Terminals Type:
  - 0: clamp terminals
  - 1: bolt terminals
- Foreign trade identification

■ PRODUCT PICTURE

TYPICAL APPLICATION

1. High-frequency spike absorption protection of IGBT.
2. High voltage frequency conversion welding machine, power supply, electric vehicle inverter, industrial induction heater.

FEATURES

1. Plastic shell, epoxy resin packaging;
2. Equivalent series resistance is small, can carry the ripple current is high;
3. Long service life;
4. Metlized polypropylene membrane structure, good self-healing.

OUTLINE DRAWING

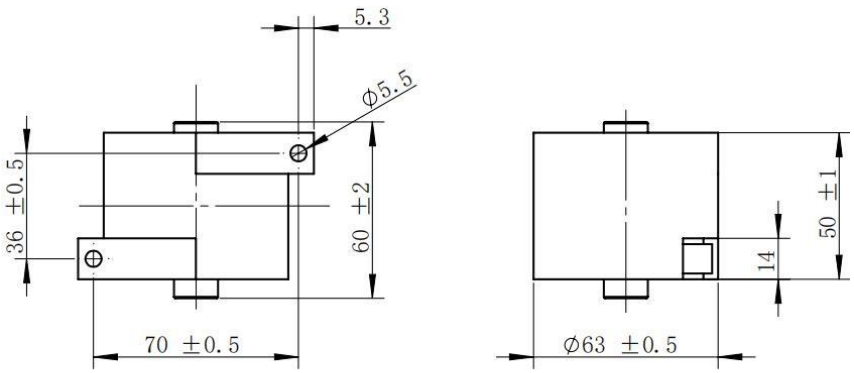

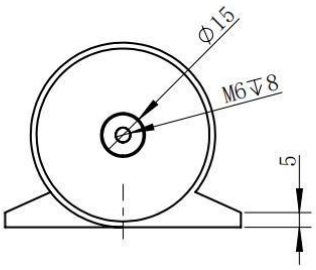

■ SPECIFICATIONS

No.	Item	Requirements
1	Reference Standards	GB/T 17702 (idt IEC 61071)
2	Rated Capacitance	4 μF
3	Capacitance Tolerance	±10 %
4	Operating Voltage	U_{rms}=500 Vac 50/60 Hz, U_N=1200 Vdc
5	Maximum Current	I_{max}=45 A @100 kHz,45 ℃
6	Maximum Peak Current	900 A
7	Loss tangent	≤0.0010 @ 1 V，1kHz
8	E.S.R.（typical value)	2.8 mΩ @ 100 kHz
9	Voltage rise rate	< 225 V/μs
10	Self Inductance	22 nH
11	Time constant	≥5000 s @ 100Vdc，60s
12	Test voltage between Terminals	1800 Vdc 60s
13	Test voltage between Terminal and Case	3,000 Vac 60 s
14	Working Temperature Range	-40 ℃～+70 ℃
15	Maximum Hot Spot Temperature	+85 ℃
16	Storage temperature	-40 ℃～+85 ℃
17	Life Expectancy	100,000 h (U_N，θ_{hs}≤85 ℃)
18	Weight	About 0.2 kg
19	Mounting Method	Vertical or horizontal placement, with a maximum torque of 3.5 N·m
20	Connection Method	M6 internal thread，Max torque 4.5 N·m
21	Maximum Altitude	2,000 m

■ PRECAUTIONS FOR USE

1. To eliminate the risk of electric shock, the capacitor is packaged with a terminal short-circuit. The reserve energy of the capacitor can be fatal, so please discharge through the resistance before operating the capacitor, but do not allow to short-circuit discharge of the capacitor. When handling or installing capacitors, it is strictly prohibited to lift insulators or terminals to avoid damage to insulators or terminals.
2. Do not use or store capacitors in corrosive environments, especially where chloride gases, sulfide gases, acids, bases, salts, or other similar substances are present. In dusty environments, it requires regular maintenance and cleaning, especially for terminals that avoid interphase conductive paths.
3. If the dent depth exceeds 1mm or any other mechanical damage.
4. With the elevation of the film capacitor, the air density gradually decreases, and the heat dissipation capacity of the capacitor decreases. External insulation and current drop shall be considered and ripple current corrected. The correction coefficient is shown in the table below.

Height（m）	2000	2500	3000	3500	4000
Correction coefficient	1.0	0.95	0.90	0.86	0.81