DATASHEET

FILM CAPACITORS – AC motor capacitor

PART NO.: C65AS1206J4000D3004

YUHUA ELECTRICAL

CBB65 Series, 440VAC, 20µF, ±5% , -25℃~70℃ , Radial, D45*H75mm

Date: 9/18/2026

Version: 2.0

AUTHORIZED DISTRIBUTOR

NextGen Components, Inc.

USA Office and Warehouse Location: 9 Orchard Road, Suit 106, Lake Forest, CA 92630, USA

RFQ/Order Support: sales@NextGenComponent.com

Note: This page was created by NextGen Components, Inc. (“NextGen”). The attached last document was created by the part manufacturer, not NextGen, and is provided strictly 'as is.’ NextGen, its subsidiaries, affiliates, employees, and agents make no representations or warranties regarding the attached last document and disclaim any liability for the consequences of relying on the information therein. All referenced brands, product names, service names, and trademarks are the property of their respective owners.

■ PART NUMBER GUIDE

The 19 digits part number is formed as follow:

Rated Voltage
S1=440 Vdc

Rated Capacitance
20×10^6 pF = 20 μF

Dimension Code
40= D45*H75mm

Terminal type
D30= 6.3mm*0.8mm
. 250# (2+2)

C	6	5	A	S	1	2	0	6	J	4	0	0	0	D	3	0	0	4

Series Code
C65A Type

Capacitance Tolerance
G: ±2% H: ±3%
J: ±5% K: ±10%
M: ±20%

Mounting Type
0: Flat Bottom

Internal Identification Code 0 to 9

Packing Quantity Code
04: 50pcs

■ PRODUCT PICTURE

■ TYPICAL APPLICATION

1. Applicable to startup and operating of the compressor of air-conditioning and refrigerator.

■ FEATURES

1. Low loss, high insulation resistance;
2. Excellent self-healing and high stability;
3. Small volume and withstand high voltage;
4. Built-in explosion-proof device, reliable safety performance.

■ OUTLINE DRAWING

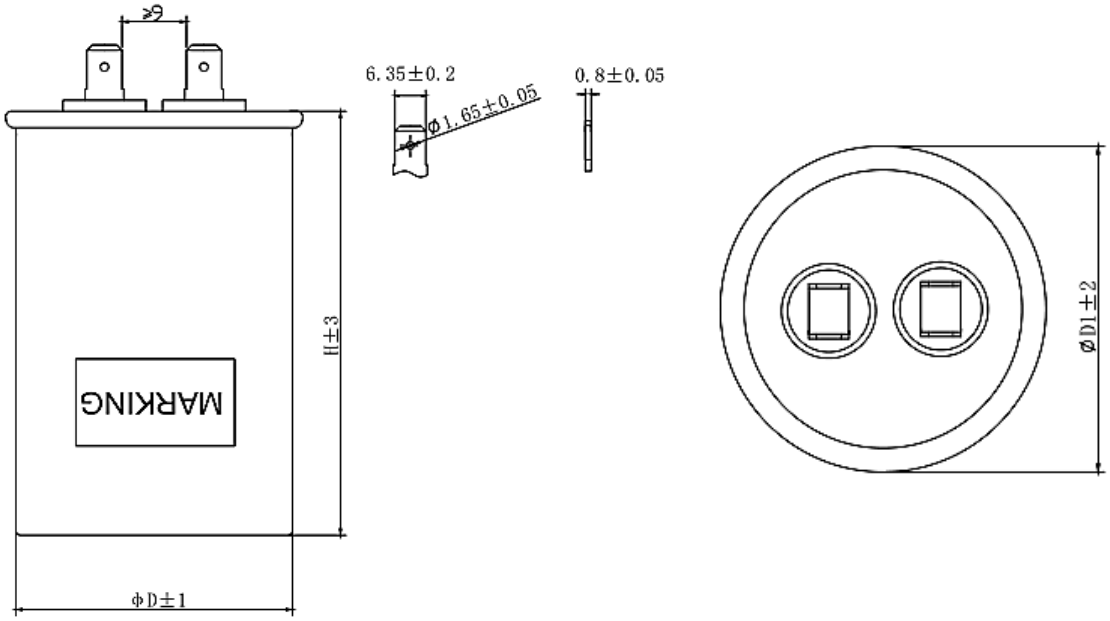

The example of Marking:

A:

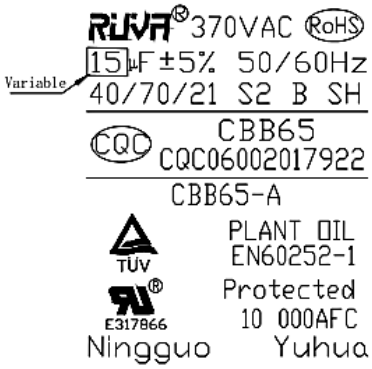

B:

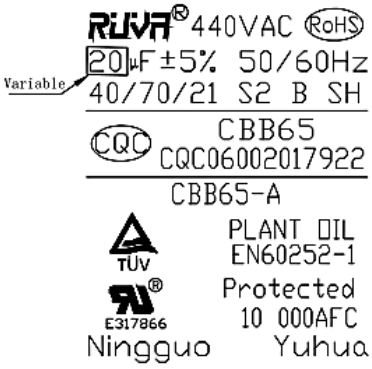

■ TECHNICAL REQUIREMENTS

Material code	Rated voltage	Nominal capacitance	Size (D×H)	ΦD1	Marking
C65AR6505JA500D3004	370V	5 μF	Φ40×50	43	A
C65AR6755J2500D3004		7.5 μF	Φ40×55	43	
C65AR6156J2900D3004		15 μF	Φ40×70	43	
C65AR6256J4100D3004		25 μF	Φ45×80	48	
C65AR6306J4300D3004		30 μF	Φ45×90	48	
C65AR6356J4500D3004		35 μF	Φ45×100	48	
C65AR6806J7100D3004		80 μF	Φ55×125	58	
C65AS1156J3800D3004	440V	15 μF	Φ45×65	48	B
C65AS1206J4000D3004		20 μF	Φ45×75	48	
C65AS1306J5000D3004		30 μF	Φ50×80	53	
C65AS1356J5200D3004		35 μF	Φ50×90	53	

1. The capacity of allowable deviation: ±5%;
2. Test voltage: Between two electrodes: Two times of rated voltage, 4S; Between electrode and shells: 3000V~, 2S;
3. Insulation resistance: Between pole-shell≥2000MΩ;
4. Dissipation factor: tgδ≤0.0020 (100Hz);
5. Terminals: 250# (2+2);
6. Using a sticky label about the identification of CQC, TUV, UL, climate type and etc according to the certification marks;