SPECIFICATION SHEET

ALUMINUM ELECTROLYTIC CAPACITORS SMD TYPE UT SERIES

SPECIFICATION SHEET NO.	T0910- UT107M100HPNTA	
ORIGINAL MFG/PART NO.	Aillen Aillen Capacitors/CAE107M2AHUTI1CTR	
NEXTGEN PART CODE	UT107M100HPNTA	Indicate This Code For RFQ /Order
DATE	Sept. 10, 2026	
REVISION	A6	Updated With Most Recent Data
DESCRIPTION AND MAIN PARAMETRICS	Aluminum Electrolytic Capacitors (CAE), SMD Type, UT Series, 2 Pads Standard Capacitor and Wide Temperature Range. Capacitance 100µF, Tolerance ±20%, Voltage 100V Case size: Ø12.5*L13.5mm, Leakage Current: 100µA Max. Ripple Current (mA r.m.s/@+105℃, 120Hz): 380mA Max. Lifetime @105°C ±2: 2000 Hours Operating Temp. Range -55°C ~+105°C Package in Tape/Reel, 200pcs/Reel REACH/RoHS Compliant, RoHS Directive2011/65/EU with amendment (EU) 2015/863 & Halogen Free	
CUSTOMER		
CUSTOMER PART NO.		
CROSS REF. PART NO.	FN, FKS, MVE, UUT, SKV and SGV	
MEMO		

VENDOR APPROVE			
Issued/Checked/Approved	NextGen Components, Inc. Mandy Xu	NextGen Components, Inc. Ruby Zhang	NextGen Components, Inc. Jack Zhang
Date: Sept. 10, 2026			

CUSTOMER APPROVE
Date:

NextGen Components, Inc. sales@NextGenComponent.com www.NextGenComponent.com

MAIN FEATURES

Image shown is a representation only. Exact specifications should be obtained from the product dimension.

- Aluminum electrolytic capacitors, foil type
- Radial lead, can-type construction for surface mount applications
- Wide operating temperature range
- High reliability and stable electrical characteristics
- Designed to meet the requirements of IEC 60384
- Operating temperature range: –55°C to +105°C
- Suitable for high-density mounting
- Rated voltage range: up to 100 V
- Capacitance range: up to 2200 µF
- Endurance: 2000 hours at 105°C
- Suitable as quality alternative parts to major manufacturers including KEMET, CHEMI-CON, NICHICON, RUBYCON, etc.
- Moisture Sensitivity Level: MSL 1 (Unlimited)
- RoHS compliant per Directive 2011/65/EU and amendment (EU) 2015/863
- REACH compliant and halogen-free

APPLICATIONS

- High-density surface mount circuits, such as: Power supply circuits/Lighting equipment
- Industrial equipment, including: Routers/Network switches/Measuring/Control instruments
- Consumer electronics, including: Audio amplifier circuits/Smoothing circuits/LED lighting

ELECTRICAL CHARACTERISTICS

- Electrical characteristics for individual part numbers are shown on Page 8 to 15
- Specifications are subject to change without prior notice due to product improvement, safety, or technical considerations. Customers are advised to confirm the latest specifications with NextGen Components prior to use
- All product parameters are subject to final confirmation by NextGen Components.

HOW TO ORDER

- Please Follow Up Part Code Guide And Indicate NextGen Order Part Code UT107M100HPNTA For RFQ/Order.

PART CODE GUIDE

RFQ
Request For Quotation

CODE	NAME	KEY SPECIFICATION OPTION
UT	Product Index	Aluminum Electrolytic Capacitors(CAE), V-Chip Type, Original MFG Series Number CDUT
107	Rated Capacitance	475: 4.7µF; 105: 1.0µF; 106: 10µF; 156: 15µF; 226: 22µF; 276: 27µF; 336: 33µF; 476: 47µF; 566: 56µF; 686: 68µF; 107: 100µF; 157: 150µF; 227: 220µF 337: 330µF; 477: 470µF; 687: 680µF; 108: 1000µF; 158: 1500µF; 228: 2200µF
M	Capacitance Tolerance	M: ±20% (Standard)
100	Rated Voltage	6V3: 6.3V; 010: 10V; 016:16V; 025: 25V; 035: 35V; 050: 50V; 063: 63V; 080: 80V; 100: 100V
H	Environmental Requirements	H: REACH/RoHS Compliant, RoHS Directive2011/65/EU with Amendment (EU) 2015/863 & Halogen Free
P	Case Diameter	C: Ø4.0mm; D: Ø5.0mm; E: Ø6.3mm; F: Ø8.0mm; G: Ø10.0mm P: Ø12.5mm
N	Case Length	H: L5.4mm; I: L6.5mm; J: L7.7mm; K: L10.2mm; N: L13.5mm
T	Package	T: Tape and Reel
A	Internal Control Code	Letter A~Z, a~z or digits (0~9)
XX	Suffix	Blank: N/A XX: Letter A~Z, a~z or digits (0~9) for Special/Custom Parameters

DIMENSION (Unit: mm) ØD4.0 ~ ØD6.3 Non explosion proof valve; ØD8.0 ~ ØD12.5 Explosion proof valve

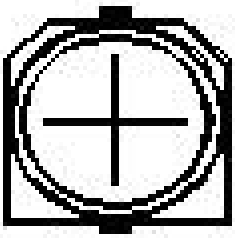

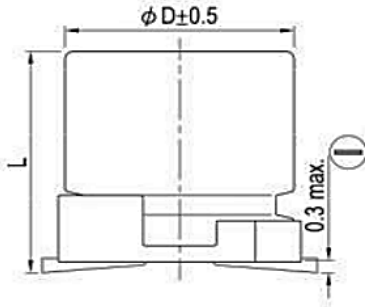

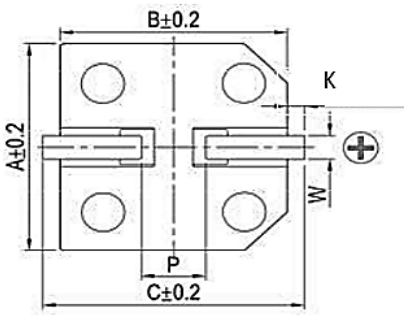

ØD	4.0	5.0	6.3	6.3	8.0	8.0	10.0	12.5
Case L	5.4±0.5	5.4±0.5	5.4±0.5	7.7±0.5	6.5±0.5	10.2±0.5	10.2±0.5	13.5±0.5
A	4.3	5.3	6.6	6.6	8.3	8.3	10.3	13.0
B	4.3	5.3	6.6	6.6	8.3	8.3	10.3	13.0
C	5.1	6.1	7.3	7.3	9.2	9.2	11.2	13.7
P	1.0±0.2	1.5±0.2	2.1±0.2	2.1±0.2	3.1±0.2	3.1±0.2	4.5±0.2	4.5±0.2
K	0.5 Max.	0.5 Max.	0.5 Max.	0.5 Max.	0.5 Max.	0.5 Max.	0.5 Max.	1.0 Max.
W	0.5~0.9	0.5~0.9	0.5~0.9	0.5~0.9	0.8~1.1	0.8~1.1	0.8~1.1	1.1~1.4

MARKING GUIDE – For Reference Only

Negative Polarity

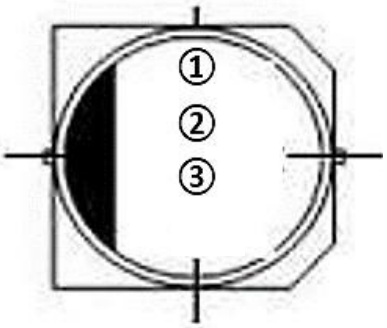

SYMBOL	NAME	VALUE	MARKING
①	Rated Capacitance	100µF	100
②	Rated Voltage	100V	100V
③	Series Code		UT

RECOMMENDED LAND PATTERN (Unit: mm)

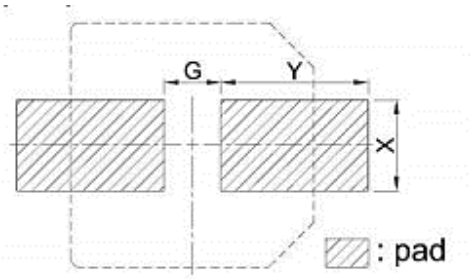

DIAMETER SIZE	X	Y	G
Ø4	1.6	2.6	1.0
Ø5	1.6	3.0	1.4
Ø6.3	1.6	3.5	1.9
Ø8	2.5	3.5	3.0
Ø10	2.5	4.0	4.0
Ø12.5	3.2	4.0	6.0

CONSTRUCTION – For Reference Only

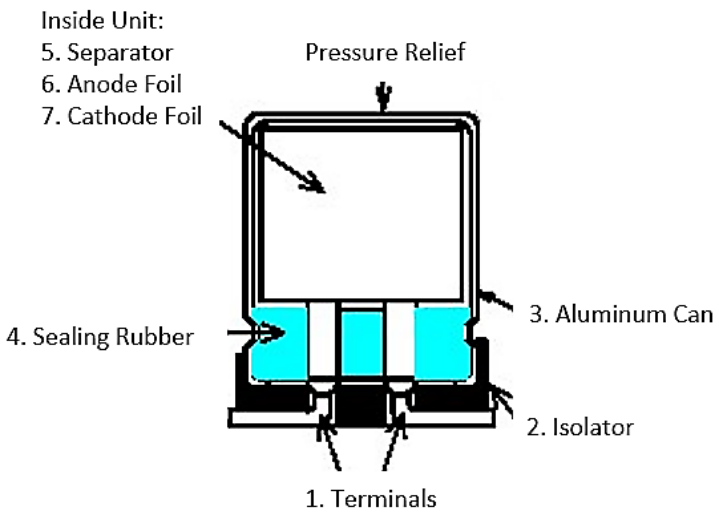

NO.	PARTS	MATERIAL
1	Terminal	Tinned Copper – Clad Steel Wire (Pb Free)
2	Isolator	Thermo-plastic resin
3	Aluminum Can	Aluminum
4	Sealing Rubber	Synthetic rubber
5	Separator	Manila hemp
6	Anode Foil	High purity aluminum foil
7	Cathode Foil	Aluminum foil

GENERAL ELECTRICAL CHARACTERISTICS – FOR DIFFERENT PART CODE

PARAMETER	UNITS	VALUE
Operating Junction Temperature Range	°C	-55 ~ +105
Storage Temperature Range	°C	-55 ~ +150
Lifetime @105°C ±2	Hours	2000

FREQUENCY COEFFICIENT OF ALLOWABLE RIPPLE CURRENT

Frequency	50Hz	120Hz	300Hz	1KHz	≥10KHz
Coefficient	0.70	1.00	1.17	1.36	1.50

TEMPERATURE COEFFICIENT

AMBIENT TEMPERATURE (°C)	105	85	≤70
Coefficient	1	1.5	2

ELECTRICAL CHARACTERISTICS - Ta = 25°C, FOR DIFFERENT PART CODE

NEXTGEN ORDER PART CODE	RATE VOL.	CAPACITOR VALUE	MAX.DF @20°C, 120HZ	MAX. LEAKAGE CURRENT	MAX. RIPPLE CURRENT @ 105°C 120HZ	CASE SIZE ØD X L
	V	µF	%	µA	mA r.m.s	mm
UT226M6V3HCHTA	6.3	22	30	3	22	4x5.4
UT336M6V3HDHTA	6.3	33	30	3	34	5x5.4
UT476M6V3HCHTA	6.3	47	30	3	26	4x5.4
UT476M6V3HDHTA	6.3	47	30	3	38	5x5.4
UT107M6V3HDHTA	6.3	100	30	6.3	40	5x5.4
UT107M6V3HEHTA	6.3	100	30	6.3	69	6.3x5.4
UT227M6V3HEHTA	6.3	220	30	13.86	69	6.3x5.4
UT227M6V3HEJTA	6.3	220	30	13.86	120	6.3x7.7
UT337M6V3HFKTA	6.3	330	30	20.79	290	8x10.2
UT337M6V3HEJTA	6.3	330	30	20.79	135	6.3x7.7
UT477M6V3HFKTA	6.3	470	30	29.61	320	8x10.2
UT158M6V3HGKTA	6.3	1500	30	94.5	450	10x10.2
UT108M6V3HGKTA	6.3	1000	30	63	410	10x10.2
UT108M6V3HFKTA	6.3	1000	30	63	380	8x10.2
UT228M6V3HPNTA	6.3	2200	32	138.6	680	12.5x13.5

ELECTRICAL CHARACTERISTICS - Ta = 25°C, FOR DIFFERENT PART CODE

NEXTGEN ORDER PART CODE	RATE VOL.	CAPACITOR VALUE	MAX.DF @20°C, 120HZ	MAX. LEAKAGE CURRENT	MAX. RIPPLE CURRENT @ 105°C 120HZ	CASE SIZE ØD X L
	V	µF	%	µA	mA r.m.s	mm
UT226M010HCHTA	10	22	24	3	21	4x5.4
UT336M010HDHTA	10	33	24	3.3	34	5x5.4
UT476M010HEHTA	10	47	24	4.7	42	6.3x5.4
UT107M010HDHTA	10	100	24	10	50	5x5.4
UT107M010HEHTA	10	100	24	10	69	6.3x5.4
UT227M010HEHTA	10	220	24	22	80	6.3x5.4
UT227M010HFITA	10	220	24	22	120	8x6.5
UT227M010HEJTA	10	220	24	22	120	6.3x7.7
UT337M010HFKTA	10	330	24	33	260	8x10.2
UT337M010HEJTA	10	330	24	33	135	6.3x7.7
UT477M010HFKTA	10	470	24	47	320	8x10.2
UT687M010HFKTA	10	680	24	68	360	8x10.2
UT108M010HGKTA	10	1000	24	100	410	10x10.2
UT158M010HPNTA	10	1500	24	150	540	12.5x13.5
UT228M010HPNTA	10	2200	26	220	680	12.5x13.5

ELECTRICAL CHARACTERISTICS - Ta = 25°C, FOR DIFFERENT PART CODE

NEXTGEN ORDER PART CODE	RATE VOL.	CAPACITOR VALUE	MAX.DF @20°C, 120HZ	MAX. LEAKAGE CURRENT	MAX. RIPPLE CURRENT @ 105°C 120HZ	CASE SIZE ØD X L
	V	µF	%	µA	mA r.m.s	mm
UT106M016HCHTA	16	10	20	3	20	4x5.4
UT226M016HCHTA	16	22	20	3.52	21	4x5.4
UT226M016HDHTA	16	22	20	3.52	30	5x5.4
UT336M016HDHTA	16	33	20	5.28	34	5x5.4
UT476M016HDHTA	16	47	20	7.52	38	5x5.4
UT476M016HEHTA	16	47	20	7.52	48	6.3x5.4
UT107M016HEHTA	16	100	20	16	69	6.3x5.4
UT107M016HEJTA	16	100	20	16	85	6.3x7.7
UT227M016HEJTA	16	220	20	35.2	120	6.3x7.7
UT337M016HFKTA	16	330	20	52.8	290	8x10.2
UT477M016HFKTA	16	470	20	75.2	300	8x10.2
UT477M016HGKTA	16	470	20	75.2	380	10x10.2
UT108M016HGKTA	16	1000	20	160	450	10x10.2
UT158M016HPNTA	16	1500	20	240	540	12.5x13.5

ELECTRICAL CHARACTERISTICS - Ta = 25°C, FOR DIFFERENT PART CODE

NEXTGEN ORDER PART CODE	RATE VOL.	CAPACITOR VALUE	MAX.DF @20°C, 120HZ	MAX. LEAKAGE CURRENT	MAX. RIPPLE CURRENT @ 105°C 120HZ	CASE SIZE ØD X L
	V	µF	%	µA	mA r.m.s	mm
UT475M025HCHTA	25	4.7	16	3	17	4x5.4
UT106M025HCHTA	25	10	16	2.5	20	4x5.4
UT106M025HDHTA	25	10	16	3	25	5x5.4
UT226M025HDHTA	25	22	16	5.5	30	5x5.4
UT336M025HEHTA	25	33	16	8.25	45	6.3x5.4
UT476M025HEHTA	25	47	16	11.75	49	6.3x5.4
UT476M025HFITA	25	47	18	11.75	91	8x6.5
UT107M025HEJTA	25	100	16	25	100	6.3x7.7
UT227M025HFKTA	25	220	16	55	270	8x10.2
UT227M025HGKTA	25	220	18	55	330	10x10.2
UT337M025HFKTA	25	330	16	82.5	290	8x10.2
UT477M025HGKTA	25	470	16	117.5	380	10x10.2
UT108M025HPNTA	25	1000	16	250	500	12.5x13.5

ELECTRICAL CHARACTERISTICS - Ta = 25°C, FOR DIFFERENT PART CODE

NEXTGEN ORDER PART CODE	RATE VOL.	CAPACITOR VALUE	MAX.DF @20°C, 120HZ	MAX. LEAKAGE CURRENT	MAX. RIPPLE CURRENT @ 105°C 120HZ	CASE SIZE ØD X L
	V	µF	%	µA	mA r.m.s	mm
UT335M035HCHTA	35	3.3	14	3	17	4x5.4
UT475M035HCHTA	35	4.7	14	3	18	4x5.4
UT106M035HDHTA	35	10	14	3.5	30	5x5.4
UT226M035HDHTA	35	22	14	7.7	30	5x5.4
UT226M035HEHTA	35	22	14	7.7	44	6.3x5.4
UT336M035HEHTA	35	33	14	11.55	45	6.3x5.4
UT476M035HEHTA	35	47	14	16.45	54	6.3x5.4
UT476M035HEJTA	35	47	14	16.45	80	6.3x7.7
UT107M035HEJTA	35	100	14	35	100	6.3x7.7
UT107M035HFKTA	35	100	14	35	240	8x10.2
UT227M035HFKTA	35	220	14	77	270	8x10.2
UT337M035HGKTA	35	330	14	115.5	370	10x10.2
UT477M035HGKTA	35	470	14	164.5	380	10x10.2
UT687M035HPNTA	35	680	14	238	540	12.5x13.5

ELECTRICAL CHARACTERISTICS - Ta = 25°C, FOR DIFFERENT PART CODE

NEXTGEN ORDER PART CODE	RATE VOL.	CAPACITOR VALUE	MAX.DF @20°C, 120HZ	MAX. LEAKAGE CURRENT	MAX. RIPPLE CURRENT @ 105°C 120HZ	CASE SIZE ØD X L
	V	µF	%	µA	mA r.m.s	mm
UT105M050HCHTA	50	1	14	3	8	4x5.4
UT225M050HCHTA	50	2.2	14	3	12	4x5.4
UT335M050HCHTA	50	3.3	14	3	14	4x5.4
UT475M050HDHTA	50	4.7	14	3	20	5x5.4
UT106M050HDHTA	50	10	14	5	23	5x5.4
UT106M050HEHTA	50	10	14	5	32	6.3x5.4
UT226M050HEHTA	50	22	14	11	43	6.3x5.4
UT226M050HEJTA	50	22	14	11	52	6.3x7.7
UT226M050HFITA	50	22	14	11	70	8x6.5
UT336M050HEJTA	50	33	14	16.5	65	6.3x7.7
UT336M050HFITA	50	33	14	16.5	70	8x6.5
UT336M050HFKTA	50	33	14	16.5	140	8x10.2
UT476M050HEJTA	50	47	14	23.5	70	6.3x7.7
UT476M050HFKTA	50	47	14	23.5	150	8x10.2
UT107M050HFKTA	50	100	14	50	210	8x10.2
UT227M050HGKTA	50	220	14	110	330	10x10.2
UT337M050HPNTA	50	330	14	165	490	12.5x13.5
UT477M050HPNTA	50	470	14	235	520	12.5x13.5

ELECTRICAL CHARACTERISTICS - Ta = 25°C, FOR DIFFERENT PART CODE

NEXTGEN ORDER PART CODE	RATE VOL.	CAPACITOR VALUE	MAX.DF @20°C, 120HZ	MAX. LEAKAGE CURRENT	MAX. RIPPLE CURRENT @ 105°C 120HZ	CASE SIZE ØD X L
	V	µF	%	µA	mA r.m.s	mm
UT105M063HCHTA	63	1	10	3	8	4x5.4
UT225M063HCHTA	63	2.2	10	3	12	4x5.4
UT335M063HDHTA	63	3.3	10	3	14	5x5.4
UT475M063HEHTA	63	4.7	10	3	24	6.3x5.4
UT106M063HEHTA	63	10	10	6.3	32	6.3x5.4
UT226M063HEJTA	63	22	10	13.86	58	6.3x7.7
UT226M063HFITA	63	22	10	13.86	58	8x6.5
UT336M063HFKTA	63	33	10	20.79	140	8x10.2
UT476M063HFKTA	63	47	10	29.61	170	8x10.2
UT107M063HGKTA	63	100	10	63	320	10x10.2
UT227M063HPNTA	63	220	10	138.6	470	12.5x13.5

ELECTRICAL CHARACTERISTICS - Ta = 25°C, FOR DIFFERENT PART CODE

NEXTGEN ORDER PART CODE	RATE VOL.	CAPACITOR VALUE	MAX.DF @20°C, 120HZ	MAX. LEAKAGE CURRENT	MAX. RIPPLE CURRENT @ 105°C 120HZ	CASE SIZE ØD X L
	V	µF	%	µA	mA r.m.s	mm
UT475M100HEHTA	100	4.7	10	4.7	19	5x5.4
UT106M100HEJTA	100	10	10	10	38	6.3x7.7
UT226M100HFKTA	100	22	10	22	100	8x10.2
UT336M100HGKTA	100	33	10	33	150	10x10.2
UT476M100HGKTA	100	47	10	47	180	10x10.2
UT107M100HPNTA	100	100	10	100	380	12.5x13.5

CHARACTERISTICS

Standard Atmospheric Conditions

The standard range of atmospheric conditions for making measurements/test as follows:

- Ambient temperature: 15˚C to 35˚C
- Relative humidity: 45% to 85%
- Air Pressure: 86kPa to 106kPa
- If there is any doubt about the results, measurement shall be made within the following conditions:
- Ambient temperature: 20˚C ± 2˚C
- Relative humidity: 60% to 70%
- Air Pressure: 86kPa to 106kPa
- As to the detailed information, please refer to following Table

Operating Temperature Range

The ambient temperature range at which the capacitor can be operated continuously at rated voltage is

-55˚C to 105˚C.

As to the detailed information, please refer to the mentioned table next pages.

<table>
<tr><th>ITEM</th><th>PERFORMANCE</th></tr>
<tr><td>Nominal Capacitance
(Tolerance)</td><td><Condition>
Measuring Frequency : 120Hz±12Hz
Measuring Voltage : Not more than 0.5V
Measuring Temperature : 20±2℃
<Criteria>
Shall be within the specified capacitance tolerance</td></tr>
<tr><td>Leakage Current</td><td><Condition>
After DC Voltage is applied to capacitors through the series protective resistor (1kΩ±10Ω) so that terminal voltage may reach the reacted use voltage. The leakage current when measured in 2 minutes shall not exceed the values of the following equation.
<Criteria>
I (μA) ≤ 0.01 CV or 3 (μA), Whichever is greater
I: Leakage Current (μA)
C: Capacitance (μF)
V: Rated Working Voltage (V)</td></tr>
<tr><td>tan δ</td><td><Condition>
See Normal Capacitance, for measuring frequency, voltage and temperature.
<Criteria>
The tangent of the loss angle (tan δ) of the capacitors shall refer to the following table. Measurements shall be made under the same conditions as those given for the measurement of the capacitance.
<table>
<tr><td>W.V.</td><td>6.3</td><td>10</td><td>16</td><td>25</td><td>35</td><td>50</td><td>63</td><td>100</td></tr>
<tr><td>Tanδ</td><td>0.30</td><td>0.24</td><td>0.20</td><td>0.16</td><td>0.14</td><td>0.14</td><td>0.10</td><td>0.10</td></tr>
</table>
Remark: Refer to this document for tan δ of other voltages.
For capacitance value>1000μF, add 0.02 per another 1000uF on the basis of standard Tanδ.</td></tr>
<tr><td>Rated voltage
(WV)
Surge voltage
(SV)</td><td>
<table>
<tr><td>W.V.
(V.DC)</td><td>6.3</td><td>10</td><td>16</td><td>25</td><td>35</td><td>50</td><td>63</td><td>100</td></tr>
<tr><td>S.V.
(V.DC.)</td><td>7.2</td><td>11.5</td><td>18.4</td><td>28.8</td><td>40.2</td><td>57.5</td><td>72.5</td><td>115</td></tr>
</table>
</td></tr>
</table>

ITEM	PERFORMANCE
Temperature Characteristic IEC-60384-4 4.12	<Condition>.

Step.	Testing Temperature(℃)	Time
1	20±2	Time to reach thermal equilibrium
2	-55(-25) ±3	Time to reach thermal equilibrium
3	20±2	Time to reach thermal equilibrium
4.	105±2	Time to reach thermal equilibrium
5	20±2	Time to reach thermal equilibrium

<Criteria>

a) At +105℃, capacitance shall be within ±20% of their origin at +20℃, measured capacitance, tan δ shall be within limit of tan δ. The leakage current value at +105℃ shall not more than 8 times the specified value.

b) At step 5, tan δ shall be within the limit of tan δ. The leakage current value shall not more than the specified value.

c) At-55℃ (-25℃), impedance (Z) ratio shall not exceed the value of the following table.

Rated Voltage (V)		6.3	10	16	25	35/50/63	100
Z-25℃/ Z+20℃ (120Hz)	＜Φ8	4	3	2	2	2	2
	≥Φ8	5	4	3	2	2	2
Z-55℃/ Z+20℃ (120Hz)	＜Φ8	12	8	4	4	3	3
	≥Φ8	8	8	6	4	3	3

d) Capacitance tan δ and impedance shall be measured at 120Hz

Sealing Tape Reel Strength

<Condition>

Peel angle: 165 to 180℃ referred to the surface on which the tape is glued.

Peel speed: 300mm per minutes

The peel strength must be 0.1 ~ 0.7N under these conditions.

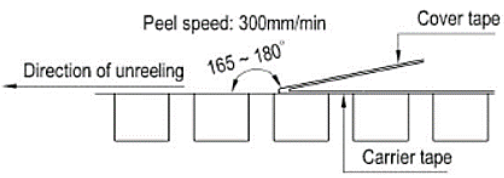

<table>
<tr><th>ITEM</th><th>PERFORMANCE</th></tr>
<tr><td>Load Life Test
IEC-60384- 4 4.13</td><td><Condition>
The capacitor is stored at a temperature of 105° C ±2 with rated voltage applied continuously for 2000+48/0 hours, Then the product should be tested after 16 hours recovering time at atmospheric conditions. The result should meet the following table:
<Criteria>
The characteristic shall meet the following requirements.
<table>
<tr><td>Capacitance Change</td><td>±30% of initial measured value.</td></tr>
<tr><td>tan δ</td><td>200% or less of the specified value</td></tr>
<tr><td>Leakage current</td><td>Not more than the specified value.</td></tr>
<tr><td>Appearance</td><td>No leakage of electrolyte or swelling of the case.
All markings shall be legible</td></tr>
<tr><td>Inner construction</td><td>No corrosion of tab terminals or electrodes</td></tr>
</table>
Remarks: Prior to the measurement of the leakage current, the D.C. rated voltage shall be applied across the capacitor and its protective resistance (1kΩ) for 30 mines after which it shall be discharged.</td></tr>
<tr><td>Shelf Life Test
IEC-60384- 4 4.17</td><td><Condition>
The capacitors are then stored with no voltage applied at a temperature of 105 ±2℃ for 1000+48/0 hours. Following this period the capacitors shall be removed from the test chamber and be allowed to stabilized at room temperature for 4~8 hours. Next they shall be connected to a series limiting resistor(1k±100Ω) with D.C. rated voltage applied for 30min. After which the capacitors shall be discharged, and then, tested the characteristics.
<Criteria> The characteristic shall meet the following requirements.
<table>
<tr><td>Capacitance Change</td><td>±30% of initial measured value.</td></tr>
<tr><td>tan δ</td><td>200% or less of the specified value</td></tr>
<tr><td>Leakage current</td><td>Not more than 200% of the specified value</td></tr>
<tr><td>Appearance</td><td>No leakage of electrolyte or swelling of the case.
All markings shall be legible</td></tr>
<tr><td>Inner construction</td><td>No corrosion of tab terminals or electrodes</td></tr>
</table>
Remark:
If the capacitors are stored more than 1 year, the leakage current may increase.
Please apply voltage through about 1 KΩ resistor, if necessary.</td></tr>
</table>

<table>
<tr><th>ITEM</th><th>PERFORMANCE</th></tr>
<tr><td>Surge Test
IEC-60384- 4 4.9</td><td>
<Condition>
Test temperature:15~35℃
Series resistor: R= $\frac{100\pm50}{C}$
R： protective resistor (KΩ)
C： nominal capacitance (μF) Test voltage: Surge voltage item 4.4
No. of cycles: 1000cycles Each cycles lasts for 6±0.5min
“ON” for 30±5 s “OFF” for 5±0.5min.
<table>
<tr><td>Leakage current</td><td>Not more than the specified value</td></tr>
<tr><td>Capacitance Change</td><td>Within±15% of initial value.</td></tr>
<tr><td>tan δ</td><td>Not more than the specified value.</td></tr>
<tr><td>Appearance</td><td>There shall be no leakage of electrolyte.</td></tr>
</table>
Attention: This test simulates over voltage at abnormal situation and not be hypothesizing that over voltage is always applied.
</td></tr>
<tr><td>Vibration Test
IEC-60384- 4 4.8</td><td>
<Condition>
Fix it at the point 4 mm or less from body. For ones of 12.5 mm or more in diameter or 25 mm or Capacitance; Direction and during of vibration:3 orthogonal directions mutually each for 2 hours(total of 6 hours)
Vibration frequency range : 10Hz ~ 55Hz
Peak to peak amplitude : 1.5mm
Sweep rate : 10Hz ~ 55Hz ~ 10Hz in about 1 minute
<Criteria>
The characteristic shall meet the following requirements.
<table>
<tr><td>Leakage current</td><td>Not more than the specified value</td></tr>
<tr><td>Capacitance Change</td><td>Within±10% of initial value.</td></tr>
<tr><td>tan δ</td><td>Not more than the specified value.</td></tr>
<tr><td>Appearance</td><td>There shall be no leakage of electrolyte.</td></tr>
</table>
</td></tr>
</table>

<table>
<tr><th>ITEM</th><th>PERFORMANCE</th></tr>
<tr><td>Solderability
Test IEC-60384-4
4.6</td><td><Condition>
The capacitor shall be tested under the following conditions:
Soldering temperature: 245℃±3℃
Dipping depth: 2mm
Dipping speed: 25±2.5mm/s
Dipping time: 3±0.5s
<Criteria>
<table>
<tr><td>Coating quality</td><td>A minimum of 95% of the surface being immersed</td></tr>
</table></td></tr>
<tr><td>Resistance to
solder heat
test</td><td><Condition>
After reflow soldering
The capacitor shall be left at room temperature for before measurement.
<Criteria>
The characteristic shall meet the following requirements.
<table>
<tr><td>Leakage current</td><td>Not more than the specified value</td></tr>
<tr><td>Capacitance Change</td><td>Within±10% of initial value.</td></tr>
<tr><td>tan δ</td><td>Not more than the specified value.</td></tr>
<tr><td>Appearance</td><td>There shall be no leakage of electrolyte.</td></tr>
</table></td></tr>
<tr><td>Damp heat test
IEC60384-4
4.12</td><td><Condition>
Humidity Test:
According to IEC60384-4 No.4.12 methods, capacitor shall
be exposed for 1000±8 hours in an atmosphere of 90~95%R H .at
60±3℃, the characteristic change shall meet the following requirement.

<Criteria>
<table>
<tr><td>Leakage current</td><td>Not more than the specified value</td></tr>
<tr><td>Capacitance Change</td><td>Within±20% of initial value.</td></tr>
<tr><td>tan δ</td><td>Not more than 120% of the specified value</td></tr>
<tr><td>Appearance</td><td>There shall be no leakage of electrolyte.</td></tr>
</table></td></tr>
</table>

<table>
<tr><th>ITEM</th><th>PERFORMANCE</th></tr>
<tr><td>Change Of Temperature Test IEC-60384-4 4.7</td><td>
<Condition>
Temperature cycle: According to IEC60384-4 No.4.7 methods, capacitor shall be placed in an oven, the condition according as below
<table>
<tr><th>No.</th><th>Temperature</th><th>Time</th></tr>
<tr><td>1</td><td>+25℃</td><td>≤3 Minutes</td></tr>
<tr><td>2</td><td>-55℃</td><td>30±2 Minutes</td></tr>
<tr><td>3</td><td>+25℃</td><td>≤3 Minutes</td></tr>
<tr><td>4</td><td>+105℃</td><td>30±2 Minutes</td></tr>
<tr><td>5</td><td>+25℃</td><td>≤3 Minutes</td></tr>
<tr><td colspan="3">1 to 5 = 1 cycle, Total 5 cycles</td></tr>
</table>
and then the capacitor shall be subjected to standard atmospheric conditions for 4 hours, after which measurements shall be made.
<Criteria>
The characteristic shall meet the following requirements.
<table>
<tr><td>Capacitance Change</td><td>Within ±10% of initial value.</td></tr>
<tr><td>tan δ</td><td>Not more than the specified value.</td></tr>
<tr><td>Leakage current</td><td>Not more than the specified value.</td></tr>
<tr><td>Appearance</td><td>No broken and undamaged.</td></tr>
</table>
</td></tr>
<tr><td>Low Temperature Test</td><td>
<Condition>
Capacitors are placed at -55 ± 3℃ for 96 ± 4 hours. And then the capacitor shall be subjected to standard atmospheric conditions for 4 hours, after which measurements shall be made.
<Criteria>
<table>
<tr><td>Leakage current</td><td>Not more than the specified value</td></tr>
<tr><td>Capacitance Change</td><td>Within±10% of initial value.</td></tr>
<tr><td>tan δ</td><td>Not more than the specified value.</td></tr>
<tr><td>Appearance</td><td>No broken and undamaged</td></tr>
</table>
</td></tr>
</table>

<table>
<tr><th>ITEM</th><th>PERFORMANCE</th></tr>
<tr><td>Vent Test
IEC-60384-4 4.16</td><td><Condition>
The following test only apply to those products with vent products at diameter ≥ Ø8 with vent.
D.C. test
The capacitor is connected with its polarity reversed to a DC power source. Then a current selected from following table is applied.
<table>
<tr><th>Diameter (mm)</th><th>DC Current (A)</th></tr>
<tr><td>22.4 or less</td><td>1</td></tr>
</table>
<Criteria>
No emission of gas after 30 minutes of the voltage application also meets the specification. The vent shall operate with no dangerous conditions such as flames or dispersion of pieces of the capacitor and/or case.</td></tr>
<tr><td>Mechanical Characteristics Test</td><td><Condition>
Bending Test: Apply pressure in the direction of the arrow at a rate of about 0.5 mm/s until bent width reaches 2 mm and hold for 60s. The board shall be the test board “B” as specified in JIS C 0051: 2002. If the land area differs, it shall be specified clearly in the next item.
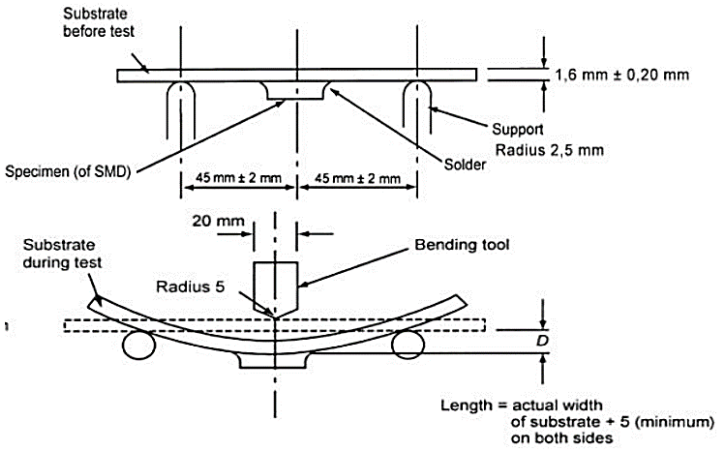

<Criteria>
Without mechanical damage such as breaks. Electrical characteristics shall be satisfied. If there are electrodes on both surfaces, above requirements shall be satisfied on whichever surface it may be fixated on.</td></tr>
</table>

ITEM	PERFORMANCE
Reflow Soldering Temperature Profile	

Welding Method	Reflow Soldering	Soldering Iron	Wave Soldering
The feasibility of	○ Feasible	○ Feasible	☒ Is not workable

Conditions for the use of lead-free reflow soldering.

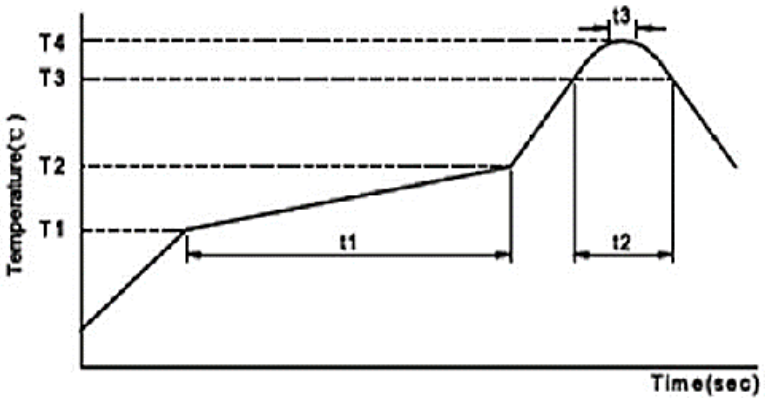

1) Methods the following

Reflow soldering: please follow the temperature condition during welding. If high temperature is used, please measure and inform the capacitor temperature and reflow soldering condition. The product size is larger and its rising temperature is slower. It is not necessary to adjust the temperature of the reflow solder in accordance with the size of the product. For example, the products of 4 and 10 will be installed in the PCB over tin furnace.

2) Precautions for soldering tin: Related factors of reflow soldering temperature:

Product size: The product size is larger and its temperature rises slowly.

Product installation position: The temperature of PCB center is lower than that of PCB

3) Reflow soldering

If possible, avoid reflow soldering twice.

If repeated reflux is unavoidable, measure and inform the first and second reflux temperature, and the time of reflow soldering

4) Please do not 3 times of reflow soldering

Please follow the following conditions when soldering tin soldering:

Soldering iron maximum temperature：350±5℃;

Welding time：3+1/-0S

ITEM	PERFORMANCE
Reflow Soldering Temperature Profile	Test Method And Peak Temperature Permissible Range

Products category		SMD aluminum electrolytic capacitor					
voltage（V）		4~50		≥63	4~100		≥160
Product size		Φ4~6.3		Φ4~6.3	Φ8~18		≥Φ12.5
Preheating	TEM（T_1~T_2，℃）	150~180					
	Time（t_1）Max, S	180					
The duration of the	TEM（T_3，℃）	217	230	217	217	230	217
	Time（t_2）Max, S	90	60	60	60	40	60
The highest temperature	TEM（T_4，℃）	260		250	250		240
	Time（t_3）Max, S	5					
Return the number		≦2					

- Please contact us if the conditions of use are higher than those listed above.
- When performing second reflow soldering, please make sure the temperature of capacitor has cooled to 5 ~ 35 ℃.
- If the reflow condition is based on IPC/JEDEC(J-STD-020), please contact us.

OP-CAP Precautions:

- Reflow soldering will reduce the rated electrostatic capacity of the product, and it should be confirmed whether reflow soldering condition meets the specification of recommended reflow soldering.
- Although the actual reflow condition change is still based on the reflow soldering method, please note that the highest temperature and the electrode terminal at the bottom of the aluminum shell must not exceed the maximum temperature.
- OP-CAP products during the process of reflow heating temperature should increase to more than 200 ℃
- If the reflow condition temperature or duration is greater than the above table, the OP-CAP product will be damaged. The electrostatic capacity of the product is reduced by about 50%, the leakage current is large (up to m A), and the outside of the capacitor is damaged.

Recommended Land Size (see page 5)

APPLICATION GUIDELINE

CIRCUIT DESIGN

1) Please make sure the environmental and mounting conditions to which the capacitor will be exposed are within the conditions specified in catalogue.

2) Operating temperature and applied ripple shall be within specification.

3) Appropriate capacitors which comply with the life requirement of the products should be selected when designing the circuit.

4) Aluminum electrolytic capacitors are polar. Make sure that no reverse voltage or AC voltage is applied to the capacitors. Please use bi-polar capacitors for a circuit that can possibly see reversed polarity.

Note: Even bi-polar capacitors cannot be used for AC voltage application.

5) Do not use aluminum electrolytic capacitors in a circuit that requires rapid and very frequent charge/ discharge. In this type of circuit, it is necessary to use a special design capacitor with extended life characteristics.

6) Do not apply excess voltage.

(1) Please pay attention to that the peak voltage, which is DC voltage overlapped by ripple current, will not exceed the rated voltage.

(2) In the case where more than 2 aluminum electrolytic capacitors are used in series, please make sure that applied voltage will be lower than rated voltage and the voltage will be applied to each capacitor equally by using a balancing resistor in parallel with the capacitor.

7) Aluminum electrolytic capacitors shall not be used under the following environmental conditions:

(1) (a) Capacitors will be exposed to water (including condensation), brine or oil. (b) Ambient conditions that include toxic gases such as hydrogen sulfide, sulfurous acid, nitrous acid, chlorine, bromine, methyl bromide, ammonium, etc. (c) Ambient conditions that expose the capacitor to ozone, ultraviolet ray and radiation.

(2) Severe vibration and physical shock conditions that exceed specification.

Vibration test condition: 10-55-10Hz

Vibration frequency range : 10~55~10hz

Sweep rate : 10~55~10Hz/minute

Sweep method : logarithmic

Amplitude or acceleration : 1.5mm (max. Acceleration is 10G)

Direction of vibration : X, Y, Z direction

Testing time: 2 hours per each direction

Shock is not applicable normally.

If a particular condition is required, please contact our sales team.

8) The main chemical solution of the electrolyte and the separator paper used in the capacitors are combustible. The electrolyte is conductive. When it comes in contact with the PC board, there is a possibility of pattern corrosion or short circuit between the circuit pattern, which could result in smoking or catching fire. Do not locate any circuit pattern beneath the capacitor end seal.

9) Do not design a circuit board that the heat generating components are placed near the aluminum electrolytic capacitor or on the reverse side of PC board, if that just under the capacitor.

10) Electrical characteristics may vary depending on changes in temperature and frequency. Please consider this variation when you design circuits.

11) When you install more than 2 capacitors in parallel, please consider the balance of current flowing into the capacitors.

12) While mounting capacitors on double-side PC board, the capacitors should be away from those unnecessary base plate holes and connection holes.

MOUNTING

1) Once a capacitor has been assembled in the set and power applied, do not attempt to re-use the capacitor in other circuits or application.

2) Leakage current of the capacitors that have been stored for more than 2 years may increase. When leakage current has increased, please perform a voltage treatment using a 1kΩ resistor.

3) Please confirm specifications and polarity before installing capacitors on the PC board.

4) Do not drop capacitors on the floor, nor use a capacitor that was dropped.

5) Do not deform the capacitor during installation.

6) Please pay attention to the mechanical shock to the capacitor by suction nozzle of the automatic insertion machine or automatic mounter, or by product checker, or by centering mechanism.

REFLOW SOLDERING

1) Please follow “Reflow Soldering Conditions” when use the part.

2) When an infrared heater is used, please pay attention to the extent of heating since the absorption rate of infrared will vary due to difference in the color and size of the capacitor.

3) Do not tilt lay down or twist the capacitor body after the capacitor are soldered to the PC board.

4) Do not carry the PC board by grasping the soldered capacitor.

5) Please do not allow anything to touch the capacitor after soldering. If PC boards are stored in stack, please make sure the PC board or other components away from the capacitor.

6) The capacitors shall not be effected by any radiated heat from the soldered PC board or other components after soldering.

7) Cleaning:

(a) Do not clean capacitors with halogenated cleaning agent. However, if it is necessary to clean with halogenated cleaning agent, please contact our sales team.

(b) Recommended cleaning method

Applicable : Any type, any ratings

Cleaning conditions: Total cleaning time shall be within 2 minutes by immersion, ultrasonic or other methods. Temperature of the cleaning agents shall be 40℃ or below. After cleaning, capacitors should be dried by using hot air for the minimum 10 minutes along with the PC board mounted. Hot air temperature should be within the maximum operating temperature of the capacitor. Insufficient dryness after water rinse may cause appearance problems, such as bottom-plate bulge and etc.;

Avoid using ozone destructive substances as cleaning agents for protecting global environment.

IN THE EQUIPMENT

1) Do not directly touch terminal by hand.

2) Do not link positive terminal and negative terminal by conductor, nor spill conductible liquid such as alkaline or acidic solution on or near the capacitor.

3) Please make sure that the ambient conditions where the set is installed are free from spilling water or oil, direct sunlight, ultraviolet rays, radiation, poisonous gases, vibration or mechanical shock.

MAINTENANCE AND INSPECTION

Please periodically inspect the aluminum capacitors that are installed in industrial equipment. The following items should be checked:

Appearance: remarkable abnormality such as pressure relief vent opening, electrolyte leaking, etc.

Electrical characteristics: capacitance, dielectric loss tangent, leakage current and etc., which are specified in catalogue or alternate product specification.

IN AN EMERGENCY

1) If you see smoke due to operation of safety vent, please turn off the main switch or pull out the plug from the outlet.

2) If you breathe the gas or ingest the electrolyte, please wash out your mouth and throat with water immediately.

3) If your skin is exposed to the electrolyte, please wash it away using soap and water.

STORAGE

1) Do not keep capacitor in high temperature and high humidity atmosphere. Storage conditions should be:

Temperature: 5℃~ 35℃ Humidity : lower than 75% Place : Indoor

2) Avoid ambient conditions where capacitors are covered with water, brine or oil.

3) A storage products for longer than 12 months is not recommended. Within other effects, the terminals may suffer degradation, resulting in bad solderability. All products shall be used within the period of 12 months based on the day of shipment

DISPOSAL

Please take either of the following methods in disposing capacitors.

1) Incinerate them after crushing capacitors or making a hole on the capacitor body.

2) If incineration is not applicable, hand them over to a waste disposal agent and have them buried in landfills.

TAPE (Unit: mm), Applicable standard JIS C0806 and IEC 60286.

Fig. 1 (Ø4)

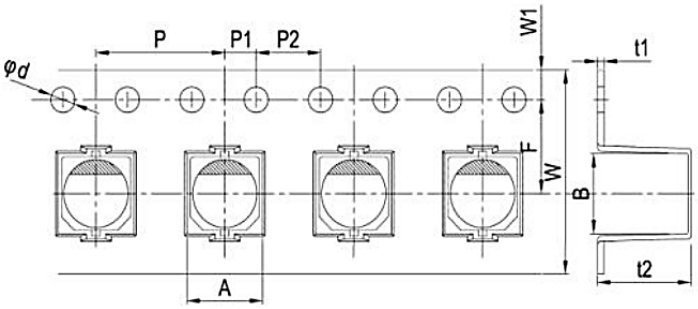

Fig. 2 (Ø5~Ø10)

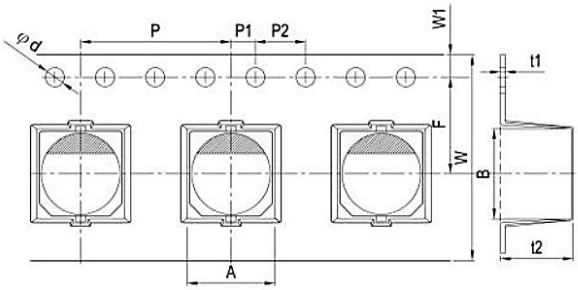

SIZE	W	P	F	A0	B0	t2	Ød	P1	P2	t1	W1	APPLICABLE
Ø4*5.4	12	8	5.5	4.7	4.7	5.8	1.5	2	4	0.4	1.75	Fig.1
Ø5*5.4	12	12	5.5	6.0	6.0	5.8	1.5	2	4	0.4	1.75	Fig.2
Ø6.3*5.4	16	12	7.5	7.0	7.0	5.8	1.5	2	4	0.4	1.75	Fig.2
Ø6.3*7.7	16	12	7.5	7.0	7.0	8.3	1.5	2	4	0.4	1.75	Fig.2
Ø8*6.5	16	12	7.5	8.7	8.7	6.8	1.5	2	4	0.4	1.75	Fig.2
Ø8*10.2	24	16	11.5	8.7	8.7	11.0	1.5	2	4	0.4	1.75	Fig.2
Ø10*10.2	24	16	11.5	10.7	10.7	11.0	1.5	2	4	0.4	1.75	Fig.2

TAPE (Unit: mm), Applicable standard JIS C0806 and IEC 60286.

Fig. 3 (Ø12.5)

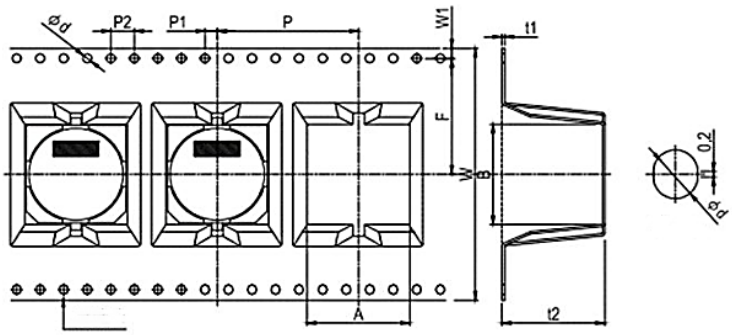

SIZE	W	P	F	A	B	t2	Ød	P1	P2	t1	W1	APPLICABLE
Ø12.5*13.5	32	24	14.2	13.4	13.4	14.5	1.5	2	4	0.5	1.75	Fig.3

REEL (Unit: mm), Applicable standard JIS C0806 and IEC 60286.

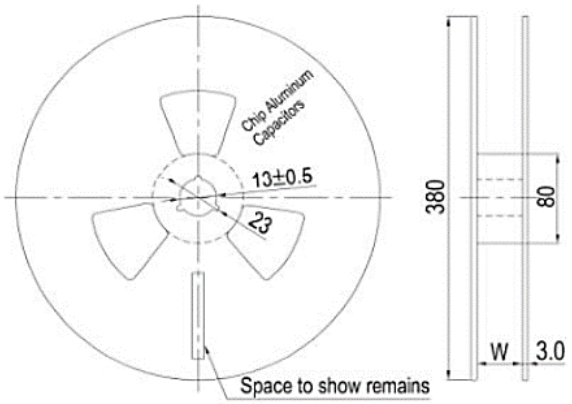

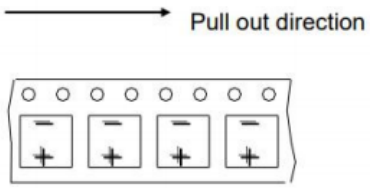

CASE SIZE	Ø4	Ø5	Ø6.3	Ø8x6.5	Ø8x10.2	Ø10	Ø12.5
W (mm)	14	14	18	18	26	26	34
Qty/Reel (pcs)	2000	1000	1000	500	500	500	200

PACKING METHOD

- Polarity: Anode on the opposite side of the feed hole
- The leader length of the tape shall not be less than 400mm including 10 or more embossed sections in which no parts are contained.
- The winding core is provided with an over 40mm long empty section

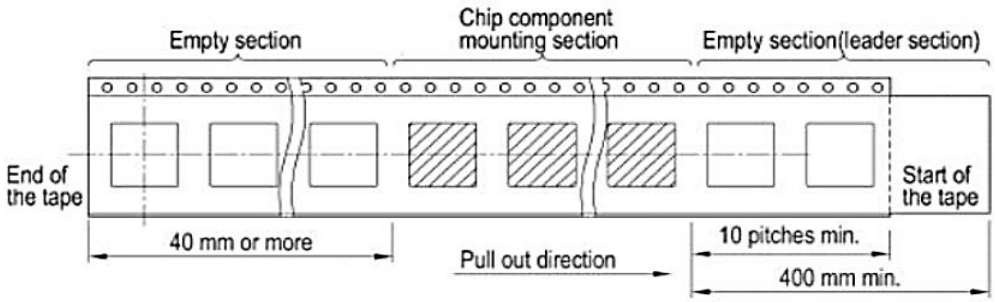

IMPORTANT NOTES AND DISCLAIMER

- RoHS Compliance: This product complies with the requirements of EU RoHS Directive (EU) 2015/863 (RoHS 3). The concentration levels of RoHS-restricted substances are below the maximum permitted threshold limits, or the substances are used in applications exempted under the directive. A RoHS Test Report for this product is available through the Download Center.
- REACH Compliance: Information regarding REACH Substances of Very High Concern (SVHCs) is available for this product. As the European Chemicals Agency (ECHA) may revise the SVHC list periodically, the latest REACH information and test reports can be obtained from the Download Center.
- Product Performance: All product parametric performance data is specified under the electrical characteristics and corresponding test conditions listed herein, unless otherwise noted. Product performance may differ if the device is operated outside the specified conditions.
- Specifications and Changes: NextGen Components, Inc. ("*NextGen*") reserves the right to make changes to this document, as well as to its products and specifications, at any time without prior notice. Customers are responsible for obtaining and verifying the most current product information prior to final design, purchase, or use.
- Warranty and Limitation of Liability: *NextGen* makes no warranty, representation, or guarantee regarding the suitability of its products for any particular purpose and assumes no liability for application assistance or customer product design. NextGen shall not be responsible for, nor accept liability arising from, the use of its products in unintended, unauthorized, or improper applications. No license, express or implied, is granted under any intellectual property rights of *NextGen*.
- Restricted Applications: *NextGen* products are not authorized for use as critical components in life-support devices or systems, or in other safety-critical applications, without express written approval from *NextGen*.
- Returns Policy: Customers must obtain a Returned Merchandise Authorization (RMA) number prior to returning any products. Returns must be requested within 30 days from the invoice date and must be in original packaging, unused, and in like-new condition. Products designated as Non-Cancelable / Non-Returnable (NCNR) at the time of quotation or purchase are not eligible for return or refund.

Full Material Declaration (FMD)

Material Declaration & Chemical Substance Composition Sheet

Part Number: **UT107M100HPNTA** **Total Weight:** **2600.00 mg (2.600 g)**
Product Type: Aluminum Electrolytic Capacitor **Compliance:** **RoHS / REACH Compliant**

Material Name	Material Wt (mg)	Substance Name	CAS Number	Substance Wt (mg)	Content (%)
Anode foil	**223.60**	Aluminum	7429-90-5	223.55528	99.98%
		Iron	7439-89-6	0.013416	0.006%
		Silicon	7440-21-3	0.013416	0.006%
		Copper	7440-50-8	0.017888	0.008%
Cathode foil	**140.40**	Aluminum	7429-90-5	137.73240	98.10%
		Iron	7439-89-6	0.70200	0.50%
		Copper	7440-50-8	0.22464	0.16%
		Silicon	7440-21-3	0.23868	0.17%
		Manganese	7439-96-5	1.50228	1.07%
Electrolytic paper	**127.40**	Cellulose	65996-61-4	114.66000	90.00%
		Needle grass paper paddles	65996-61-4	12.74000	10.00%
Electrolyte	**280.80**	γ-Butyrolactone	96-48-0	238.68000	85.00%
		Phthalates	88-99-3	42.12000	15.00%
Aluminum Case	**811.20**	Aluminum	7429-90-5	796.31448	98.165%
		Iron	7439-89-6	3.65040	0.450%
		Silicon	7440-21-3	0.97344	0.120%
		Manganese	7439-96-5	9.32880	1.150%
		Polyurethane alcohol	9009-54-5	0.93288	0.115%
Lead wire	**174.20**	Aluminum	7429-90-5	69.68000	40.00%
		Iron	7439-89-6	74.90600	43.00%
		Copper	7440-50-8	20.38140	11.70%
		Tin	7440-31-5	9.23260	5.30%
Rubber stopper	**514.80**	Butyl Rubber	9010-85-9	175.03200	34.00%
		Carbon Black	1333-86-4	92.66400	18.00%
		Copper Zinc Iron Oxide	66402-68-4	216.21600	42.00%
		Octyl phenolic resin	26678-93-3	30.88800	6.00%
Base plate	**327.60**	Poly(p-benzoyl-p-phenylenediamine)	25776-72-1	196.56000	60.00%
		Glass fiber	65997-17-3	127.76400	39.00%
		Carbon Black	1333-86-4	3.27600	1.00%
Total Product Weight:				**2600.00 mg**	**100.00%**