DATASHEET

FILM CAPACITORS – Power Factor Correction

PART NO.: YHD4513005J002HW

YUHUA ELECTRICAL

YHD Series, 450VAC, 3×30µF, ±5 %, -40℃~85℃ , Radial, D86*H165mm, Clamp Terminals

Date: 08/24/2026

Version: 2.0

AUTHORIZED DISTRIBUTOR

NextGen Components, Inc.

USA Office and Warehouse Location: 9 Orchard Road, Suit 106, Lake Forest, CA 92630, USA

RFQ/Order Support: sales@NextGenComponent.com

Note: This page was created by NextGen Components, Inc. (“NextGen”). The attached last document was created by the part manufacturer, not NextGen, and is provided strictly 'as is.’ NextGen, its subsidiaries, affiliates, employees, and agents make no representations or warranties regarding the attached last document and disclaim any liability for the consequences of relying on the information therein. All referenced brands, product names, service names, and trademarks are the property of their respective owners.

■ PART NUMBER GUIDE

The 14 digits part number is formed as follow:

Series Code
YHD type

Rated Phase Capacitance
300×10^5 pF = 30 μF

Internal Distinguishing Code
for different design

Y	H	D	4	5	1	3	0	0	5	J	0	0	2	H	W

Rated Voltage
45×10^1=450 Vdc

Capacitance Tolerance
J: ±5 % or 0 %～+5 %
K: ±10 % or -5 %～+10 %

Terminals Type
0: cap terminals
1: bolt terminals

■ PRODUCT PICTURE

■ Typical Application

For reactive power compensation or AC filter circuit, to increase power factor and harmonic filtering.

■ Features

1. Metallized Polypropylene, good self-healing property.
2. Cylindrical Al. case, dry construction, clamp terminals.
3. Over-pressure disconnector, more safety.

■ Outline Drawing

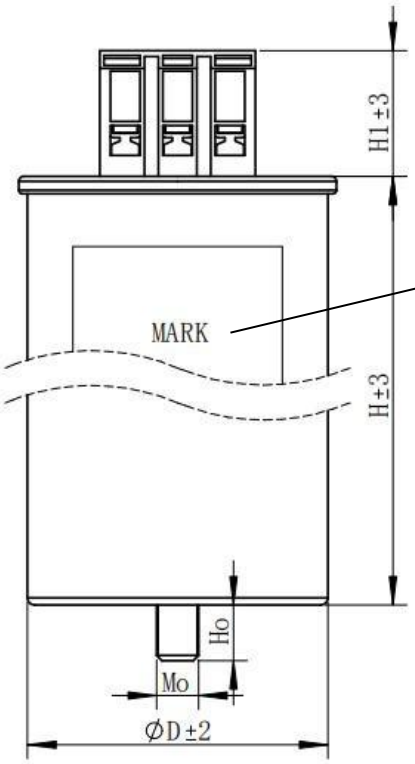

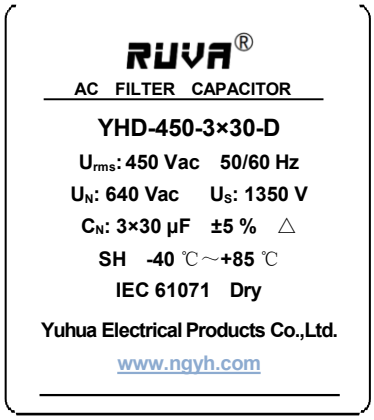

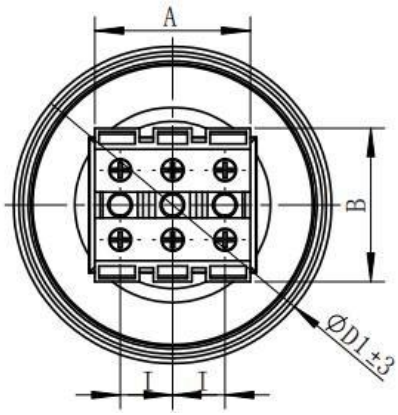

D	86
H	165
H_1	36
D_1	91
$M_0 \times H_0$	M12×16
I	15
A	45
B	44

■ Specifications

No.	Item	Requirements
1	Reference Standards	GB/T 17702 (idt IEC 61071)
2	Rated Capacitance	3×30 μF
3	Capacitance Tolerance	±5 %
4	Operating Voltage	U_{rms}=450 Vac 50/60 Hz, U_N=640 Vac
5	Permissible Voltage Overload	1. U_{rms}: ≤8h/day 1.15U_{rms}: ≤30min/day 2. U_{rms}: ≤5min/day 1.3U_{rms}: ≤1min/day 1.5U_{rms}: 30ms, 1000 times
6	Surge Voltage U_S	1350 V
7	Maximum Current I_{max}	3×35 A @T_{amb}≤+55℃
8	Maximum Peak Current I^	3×1.1 kA
9	Tanδ of dielectric $Tan\delta_0$	2×10^{-4}
10	Series resistance R_S	3×1.0 mΩ @1 kHz 20 ℃
11	Thermal resistance R_{th}	4.4 K/W
12	Time constant	≥5000 s
13	Test voltage between Terminals	680 Vac/50 Hz 10 s
14	Test voltage between Terminal and Case	3,600 Vac/50 Hz 10 s
15	Working Temperature Range	-40 ℃～+85 ℃
16	Maximum Hot Spot Temperature	+85 ℃
17	Storage temperature	-40 ℃～+85 ℃
18	Relative humidity	≤95 %
19	Cooling Method	Natural or forced cooled
20	Life Expectancy	100,000 h (θ_{hs}≤70 ℃)
21	Failure rate	≤300 fit
22	Discharge Method	Without internal discharge resisters
23	Assembling Construction	Al. case, PU resin filled
24	Weight	About 1.2 kg
25	Explosion-Proof Method	Over-pressure disconnect
26	Mounting Method	Vertically, M12 bolt, Max torque 10 N·m
27	Connection Method	Clamp terminals, △, Max torque 2.5 N·m
28	Maximum Altitude	2,000 m

■ Installation requirements

1. The capacitor should be installed in a cool and ventilated place, avoid direct sunlight or close to other heating objects.
2. The capacitor must be mounted vertically with the terminals upwards. The bottom stud should be well grounded.
3. During installation, a gap of at least 20 mm should be left at the side of each product to facilitate the heat dissipation of the product. A gap of at least 20 mm should be left on the upper of the terminal too, and the connection cable shall be of flexible type and keep slack , do not use hard core cable, so as to ensure the explosion-proof function of the product.
4. When multiple capacitors are used in parallel, the current carrying capacity of terminals and wires should be considered. We recommended that each capacitor use independent lead wires, if you have any other connection way please contact us.
5. For the clamp type design, recommend to using a slotted screwdriver to install the terminals. For the bolt type design, recommended to connect wires between two nuts, the lower torque wrench is used to ensure the ontology is not passed to the capacitor.
6. Installation & commissioning procedures
   (1) Unpack Capacitor, don’t touch capacitor terminals by hand directly.
   (2) Check Physically.
   (3) Fixed capacitors.
   (4) Ensure for correctness of supply voltage, frequency, temperature, etc.
   (5) Connect Capacitor.
   (6) Switch on supply.
   (7) Check main supply voltage and current.
7. Before operating the capacitors (installation, disassemble, etc.), the capacitor must be fully discharged (discharge through resistance, and then short-circuit discharge and grounding).

■ Operation and Maintenance Requirements

1. The allowable internal hot spot temperature of the capacitor during operation is 85 ℃, to ensure this requirement, please pay close attention to the ambient temperature and working current applied, or take forced air cooling measures when necessary.
2. The maximum service life of capacitor depends on its working conditions (such as working voltage, hot spot temperature, etc.), which can be referred to the figure below:

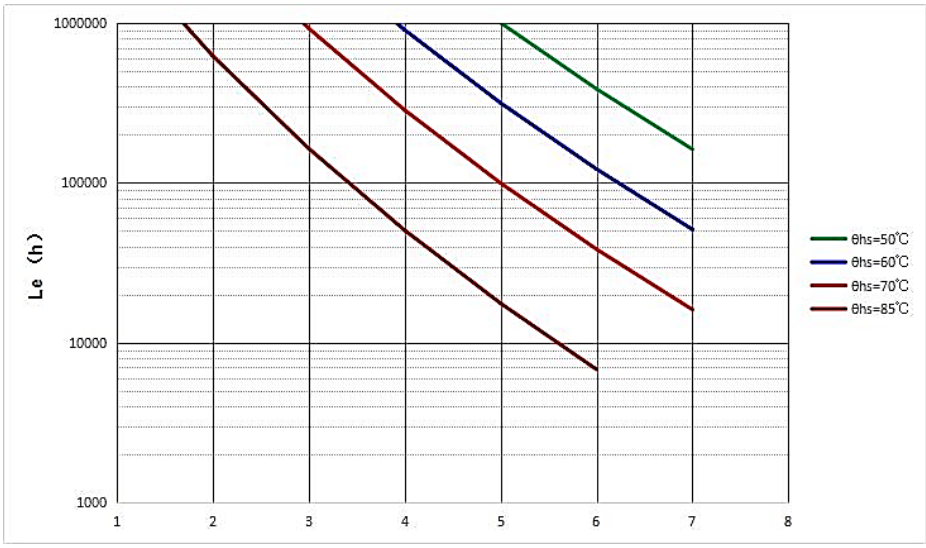

Life expectancy (L_e) on different hot spot temperature (θ_{hs}) VS. operating voltage (U_w)

3. It is recommended that the grounding point of capacitor should be kept reliable through the bolt.
4. Current limiting fuse or moulded case circuit breaker must be used for short-circuit protection. Short circuit protection devices and cables must be able to withstand minimum 40 A current for a long time.
5. Check tightness of Connections and terminals periodically, check short circuit protection fuses and the discharge resistance whether normal work. Clean the terminals periodically to avoid dust or other conductive garbage can cause a short-circuit.
6. Use current clamp table or other on-line measuring tools of current measurement capacitor current every six mouth.